Preparing to Consolidate and Report Academic Statistics

Prerequisites for Preparing to Consolidate and Report Academic Statistics

Before you can consolidate academic statistics and use them for reporting, you must perform prerequisite setup tasks. After you complete the prerequisites, you can run the Consolidate Academic Statistics process (SRPCCONP) to generate consolidated statistics data on students and then create reports based on this data.

Set up the following items for reporting:

1. Academic Institution. See Setting Up Academic Institutions for Reporting
2. Academic careers and programs. Setting Up Academic Careers and Academic Programs for Reporting
3. Academic level and load rules.Setting Up Academic Level and Load Rules for Reporting
4. Student attributes.Setting Up Student Attributes for Reporting
5. Extracurricular activities.Setting Up Extracurricular Activities for Reporting
6. National Student Clearinghouse (NSC) branch codes.Setting Up Branch Codes for NSC Reporting
7. Statistic period types.Setting Up Statistic Period Types
8. Academic statistics periods.Setting Up Academic Statistics Periods
9. Bundle 34: New

   NSC program level. Setting Up For NSC Program Level Reporting

Setting Up Academic Institutions for Reporting

Use the Academic Institution 3 page to set up the default student attribute for cohort that your academic institution uses for cohort reporting. Use this page also to define NSC reporting options, such as the default Federal Interagency Committee on Education (FICE) code for your academic institution, and how the NSC Extract process calculates each student's anticipated graduation date.

Related Links

"Defining Academic Institutions (PeopleSoft Campus Solutions 9.0 Application Fundamentals PeopleBook)"

Copyright © 1988, 2014, Oracle and/or its affiliates. All rights reserved.

Setting Up Academic Careers and Academic Programs for Reporting

Complete the following setup tasks for academic careers and programs:

- Define primacy for academic careers on the Academic Career Table 2 page and for programs on the Academic Program page.

  Because reporting agencies require that you report a student at a given point in time under one academic career and one academic program, define primacy for all academic careers and programs. When the Consolidate Academic Statistics process (SRPCCONP) encounters a student who is active in multiple academic careers or academic programs for an academic statistics period, the process locates the student's primary academic career and program, based on the student's academic career and program that have the lowest primacy number at the academic institution. The process consolidates all of the student's academic career, program, level, load, and other academic statistic information into one record for reporting. For example, a student might be actively enrolled in a JD program and an MA program. These academic programs might be within different academic careers. At any point in time, the student might be enrolled part-time in the JD program and part-time in the MA program. By defining primacy, the Consolidate Academic Statistics process can calculate a student's level and load under one primary academic career and program, using *all* the level and load elements on a student's record. If the JD program has the lower primacy number at the academic institution, the student is reported full-time under the JD program. The process uses the institutional-level primacy rather than the student-level primacy so that the reports always coincide with your institution's financial aid processing.

- Indicate, on the Academic Career Table 2 page, whether an academic career qualifies as graduate level for reporting purposes.

- Indicate, on the Academic Program page, whether students in an academic program are eligible for financial aid.

  The Consolidate Academic Statistics process excludes from its process calculations the academic programs in which students are not eligible for financial aid.

Related Links

"Setting Additional Academic Career Parameters (PeopleSoft Campus Solutions 9.0 Application Fundamentals PeopleBook)"

"Describing Academic Programs (PeopleSoft Campus Solutions 9.0 Application Fundamentals PeopleBook)"

Setting Up Academic Level and Load Rules for Reporting

Use the Level/Load Rules component to define academic level and load rules for *every* academic career. The Consolidate Academic Statistics process (SRPCCONP) uses the defined rules to locate a student's academic level and load.

 Copyright © 1988, 2014, Oracle and/or its affiliates. All rights reserved.

Related Links

"Defining Academic Level and Load Rules (PeopleSoft Campus Solutions 9.0 Application Fundamentals PeopleBook)"

Setting Up Student Attributes for Reporting

Use the Student Attributes page to assign student attribute and student attribute values to a student, and to indicate the primacy of each one. The Consolidate Academic Statistics process (SRPCCONP) locates a student's primary cohort based on the data on this page. You can then use students' primary cohort data for reporting and analysis.

Related Links

Tracking Student Attributes

Setting Up Extracurricular Activities for Reporting

Use the Extracurricular Activity Table page to define extracurricular activity codes and to define the primacy of the extracurricular activities for your setID. Before you can track extracurricular activities for students, set up these extracurricular activity codes. After you set up the codes, you can use the Extracurricular Activity page in Student Records or PeopleSoft Recruiting and Admissions to track extracurricular activities for individuals.

Related Links

Tracking Extracurricular Activities

Setting Up Branch Codes for NSC Reporting

To set up branch codes, use the NSC Branch Table component (NSLC_BRANCH_TBL).

This section discusses how to define NSC branch codes for NSC reporting.

Page Used to Set Up NSC Branch Codes

Page Name	*Definition Name*	*Navigation*	*Usage*
NSC Branch Table (National Student Clearinghouse branch table)	NSLC_BRANCH_TBL	Set Up SACR, Product Related, Student Records, Enrollment Reporting Codes, NSC Branch Table, NSC Branch Table	Define the branch codes that your academic institution uses when reporting enrollment status to the NSC.

Copyright © 1988, 2014, Oracle and/or its affiliates. All rights reserved.

Defining NSC Branch Codes for Reporting

Access the NSC Branch Table page (Set Up SACR, Product Related, Student Records, Enrollment Reporting Codes, NSC Branch Table, NSC Branch Table).

Image: NSC Branch Table page

This example illustrates the fields and controls on the NSC Branch Table page. You can find definitions for the fields and controls later on this page.

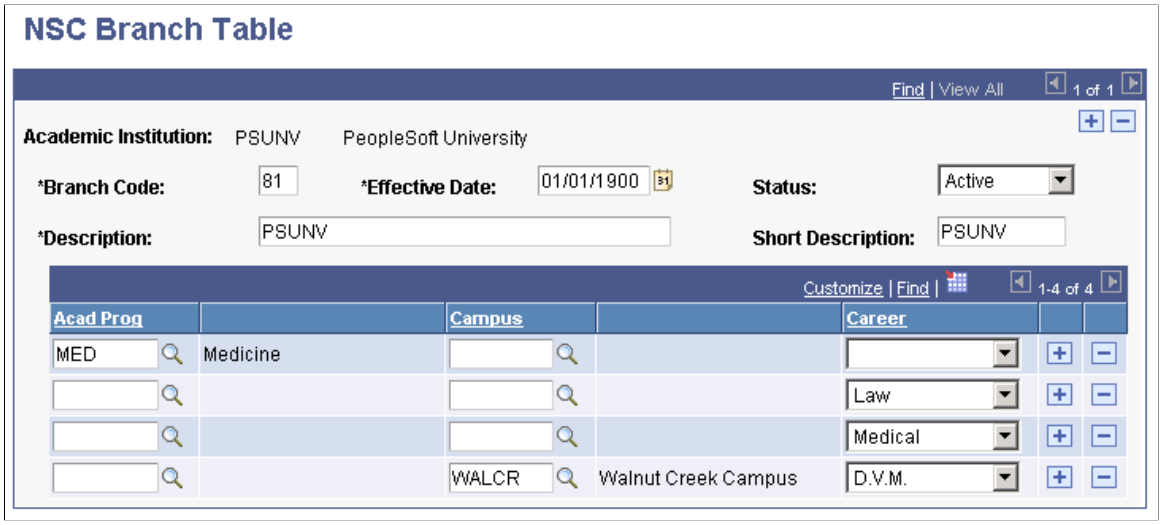

The NSC requires that your institution defines a branch code for each group of students that has its own reporting time line. For example, if you have multiple campuses at your academic institution, and you are reporting each of these campuses separately to the NSC at different times of the year, you might use a different branch code for each campus.

Another example is if your institution has academic programs that are running on different calendars. For instance, your institution has a law program, a medical program, an undergraduate program, and a graduate program. Whereas the undergraduate and graduate programs might run on a semester term type, the law and medical programs might run on quarter term type. In such a case, your institution might use different branch codes for the semester programs and the quarter programs.

Academic Institution Select the academic institution for which you are defining the branch code.

Branch Code Enter the branch code for the academic institution according to the NSC contractual agreement.

Acad Prog (academic program) (Optional) Select the academic program associated with this branch code so that when you run the NSC Extract process, it reports data for only these students.

Campus (Optional) Select the campus associated with this branch code so that when you run the NSC Extract process, it reports data for only these students.

Career (Optional) Select the academic career associated with this branch code so that when you run the NSC Extract process, it reports data for only these students.

 Copyright © 1988, 2014, Oracle and/or its affiliates. All rights reserved.

Setting Up Statistic Period Types

To set up statistic period types, use the Academic Statistics Type component (ACAD_STAT_TYPE).

This section discusses now to define statistic period types.

Page Used to Set Up Statistic Period Types

Page Name	*Definition Name*	*Navigation*	*Usage*
Academic Statistics Type	ACAD_STAT_TYPE	Records and Enrollment, Enrollment Reporting, Consolidated Statistics, Define Statistics Type, Academic Statistics Type	Define statistics period types.

Defining Statistics Period Types

Access the Academic Statistics Type page ((Records and Enrollment, Enrollment Reporting, Consolidated Statistics, Define Statistics Type, Academic Statistics Type).

Copyright © 1988, 2014, Oracle and/or its affiliates. All rights reserved.

Bundle 34

New field: Year CIP Code Published

Image: Academic Statistics Type page

This example illustrates the fields and controls on the Academic Statistics Type page. You can find definitions for the fields and controls later on this page.

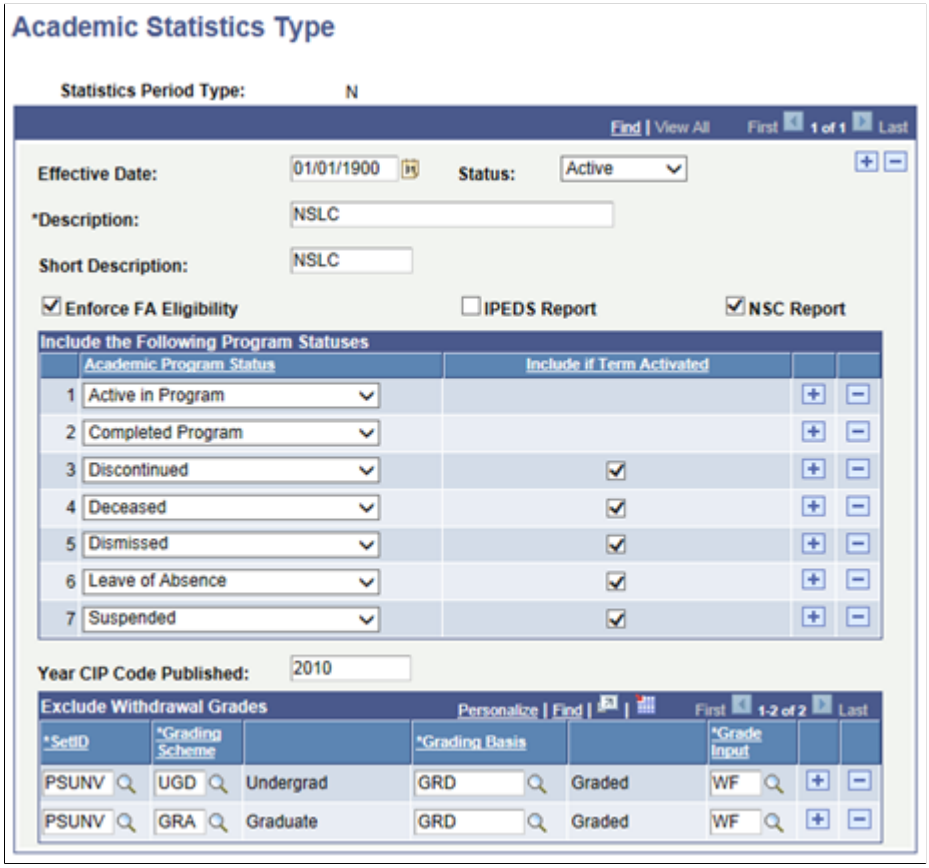

Statistics period types are descriptors of an academic statistics period, helping to identify the type of reporting requirement that relates to a particular academic statistics period. For example, you might define the statistics period type *IP* for IPEDS reporting, *N* for NSC reporting, and *SR* for the Student Record Census report. You will later attach statistics period types to academic statistics periods on the Academic Statistics Period page.

Enforce FA Eligibility (enforce financial aid eligibility)

Select to have the Consolidate Academic Statistics process (SRPCCONP) use the value of the Financial Aid Eligible check box on the Academic Program page for this statistics period type.

Clear this check box to have the Consolidate Academic Statistics process disregard the value of the Financial Aid Eligible check box on the Academic Program page for this statistics period type. The Consolidate Academic Statistics process will thus retrieve all students that meet its processing parameters, regardless of the financial aid eligibility of the student's academic program.

Copyright © 1988, 2014, Oracle and/or its affiliates. All rights reserved.

For example, you would clear this check box for any statistics period type in which you need to report statistics for all students regardless of their financial aid eligibility, such as with the NSC Extract report or the IPEDS report.

IPEDS Report

Select to identify an academic statistics type as being used for IPEDS reporting purposes. This field is available only when the installation country (INSTALLATION.COUNTRY) = USA.

When attached to an academic statistics period, an IPEDS Report statistics type identifies the statistics period as an IPEDS reporting period, which enables the Consolidate Academic Statistics process (SRPCCONP) to report a student's ethnicity according to the IPEDS reporting requirements.

NSC Report

Select to identify the statistics type as one that will be used for NSC Reporting. When you select the check box, the Year CIP Code Published field and the Exclude Withdrawal Grades grid become available.

Note: For information about excluding grades from academic load calculation for NSC Reporting,

---

See Understanding Consolidated Statistics Processes.

Academic Program Status

Select the students' academic program status for the Consolidate Academic Statistics process to consider and include in its results. For an academic statistics period to which this statistics period type is attached, the Consolidate Academic Statistics process will include in its results only the students with the academic program statuses specified here. Thus, you can define various statistics period types for different reporting needs. For example, you can define a statistics period type for NSC reporting that includes all of the academic program statuses that your institution is required to report to the NSC.

Include if Term Activated

This check box is available for all Academic Program Status values other than *Active in Program* and *Completed Program* (because the Consolidate Academic Statistics process always selects these values).

When the check box is selected, the process includes students with a non-active status, if they are term activated in the reporting term. For example, you select the Include if Term Activated check box for the program status of *Leave of Absence* for a particular statistics period type. You then run the process for a statistics period, with the updated statistics period type, and a date of 09/15/2007. The reporting term is Fall 2007(8/30/2007 – 12/12/2007). A student has a program status of *Leave of Absence,* with an effective dated row of 07/15/2007 – the student's program is therefore not active at the begin date of the reporting term. However, if the student is term activated for

Copyright © 1988, 2014, Oracle and/or its affiliates. All rights reserved.

Fall 2007, the Consolidate Academic Statistics process includes this student's record.

Year CIP Code Published (Year Classification of Instructional Program Code Published)

Bundle 34: New field

This field is available when the NSC Report check box is selected. The value that you enter here is used by in the NSC extract process to provide the program CIP Year value. As at July 2014, the CIP Year for codes used by NSLDS is 2010.

See Understanding Consolidate Academic Statistics Process Calculations

Exclude Withdrawal Grades

Use this grid to identify the grades that are to be excluded when calculating academic load for a statistics period with this statistics type. When a grade is listed in the Grade Input field, the Consolidated Statistics process (SRPCCONP) excludes the units associated with any student enrollment record that includes that grade. Using the page example above, if a student has a total of 12 units for a statistics period, and 3 of those units are graded with a WF, the process uses only the remaining 9 units to calculate the student's academic load.

Note: For information about excluding grades from academic load calculation for NSC Reporting,

See Understanding Consolidated Statistics Processes.

Setting Up Academic Statistics Periods

To set up academic statistics periods, use the Academic Statistics Period component (ACAD_STATS_PERIOD).

This section provides an overview of academic statistic periods and discusses how to define them.

Understanding Academic Statistics Periods

An academic statistics period is the rule that the Consolidate Academic Statistics process (SRPCCONP) uses to control exactly when and how it will function. An academic statistics period defines the valid academic career and term combinations that the Consolidate Academic Statistics process uses to collect various academic statistics for students. An academic statistics period also defines the academic level and load rules and the statistics period type that the process uses.

The Consolidate Academic Statistics process locates the valid academic career and term combinations, based on the snapshot date for the academic statistics period. Valid academic career and term combinations can overlap each other and start and end independently yet can also roll up into one

 Copyright © 1988, 2014, Oracle and/or its affiliates. All rights reserved.

academic statistics period. You can even roll up different term values, such as semesters and quarters, into one academic statistics period.

Image: Example of an academic statistics period across terms

In the following diagram, the semester and quarter terms from different academic careers roll up into one academic statistics period:

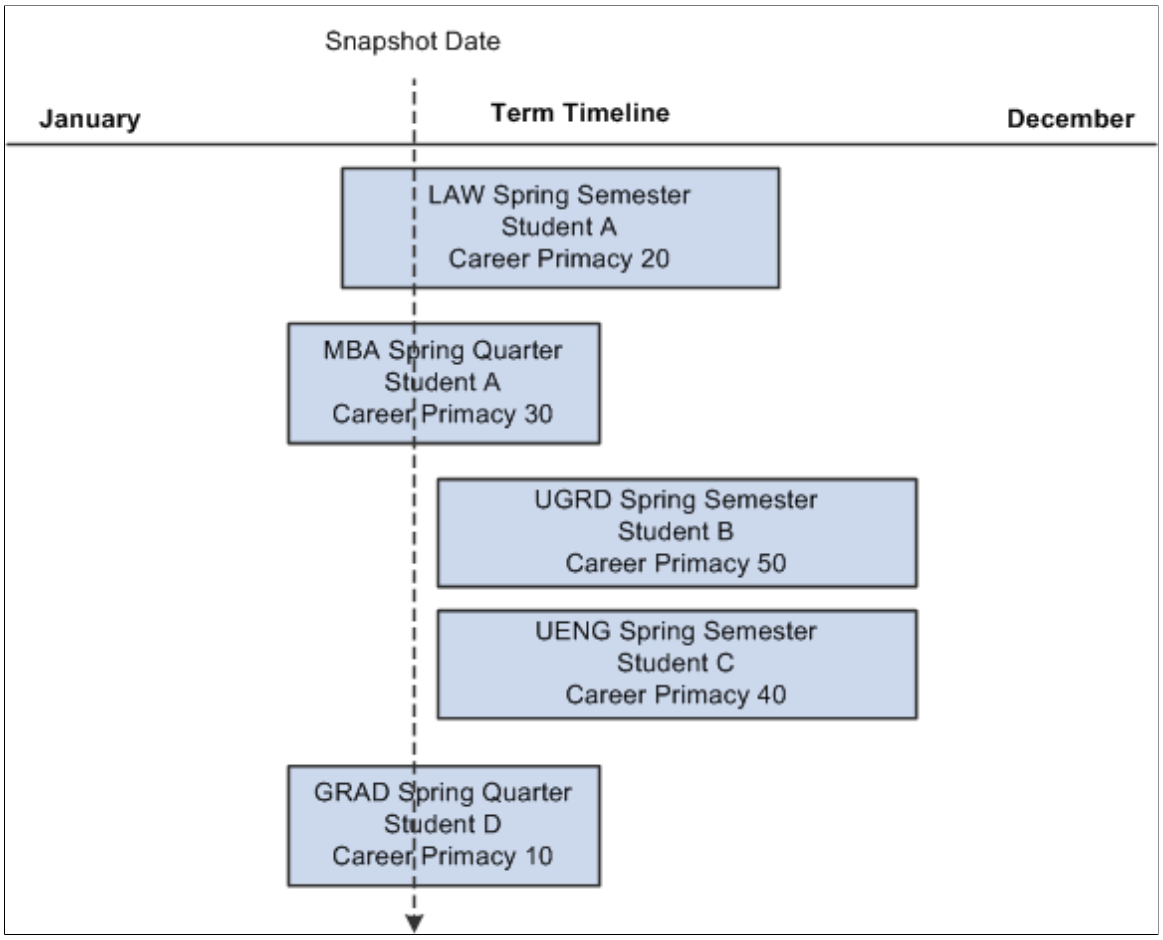

The vertical line defines the valid academic career and term combinations for the academic statistics period. The Consolidate Academic Statistics process gathers data for students in all academic career and term combinations that the line passes through. If a student has only one academic career in these terms, the process calculation is straightforward. However, if a student has multiple academic careers in these terms, such as how Student A has LAW and MBA academic careers, the process uses the academic career with the lowest primacy number to calculate the student's academic statistics. In this scenario, the process uses LAW as the primary academic career for Student A and converts the student's MBA units from quarter units to semester units.

For information about NSC program level reporting, see Setting Up For NSC Program Level Reporting.

Copyright © 1988, 2014, Oracle and/or its affiliates. All rights reserved.

Page Used to Set Up Academic Statistics Periods

Page Name	*Definition Name*	*Navigation*	*Usage*
Academic Statistics Period	ACAD_STATS_PERIOD	Records and Enrollment, Enrollment Reporting, Consolidated Statistics, Define Statistics Period, Academic Statistics Period	Describe an academic statistics period, including the statistics period type, academic load rule, consolidation trigger, and snapshot date.

Defining Academic Statistics Periods

Access the Academic Statistics Period page (Records and Enrollment, Enrollment Reporting, Consolidated Statistics, Define Statistics Period, Academic Statistics Period).

Bundle 34

New field: Aid Year

Image: Academic Statistics Period page

This example illustrates the fields and controls on the Academic Statistics Period page. You can find definitions for the fields and controls later on this page.

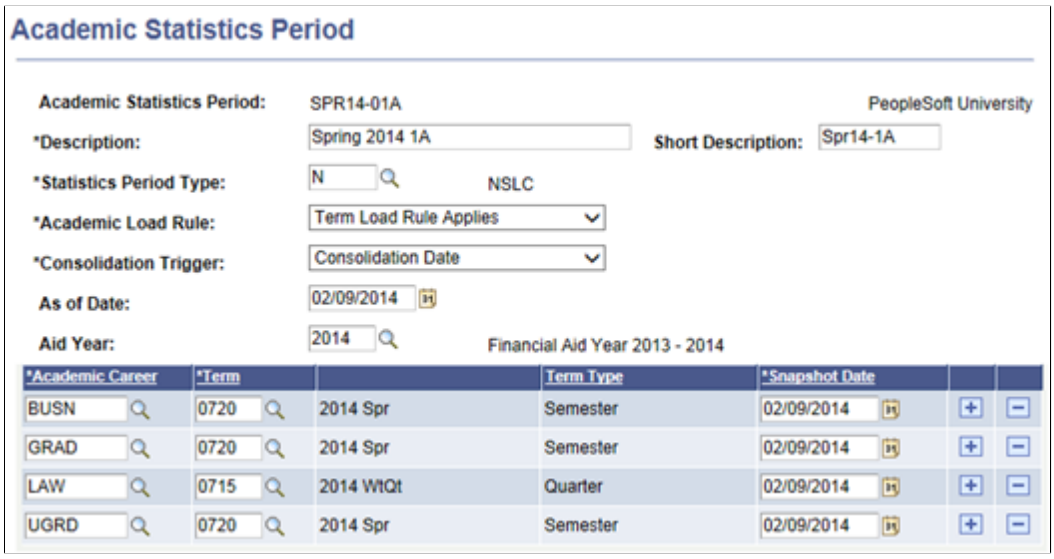

Setting Up Academic Statistics Periods

Description and **Short Description**

Enter a description and short description for this academic statistics period. The system uses these descriptions on various pages to identify this academic statistics period.

The system also uses these descriptions for the header record of the NSC Extract report. The NSC requires that the header record of the extract include the academic term for the reported data, such as spring 2012 or fall 2012. Be sure to include this information in the descriptions as necessary. For NSC academic

Copyright © 1988, 2014, Oracle and/or its affiliates. All rights reserved.

statistics periods, use descriptions such as *Fall 2012-1st NSC Run, Fall 2012-2nd NSC Run,* and *Fall 2012-3rd NSC Run* so that your institution can distinguish between the numerous runs of the NSC Extract report. The detailed descriptions are especially useful if you are running the NSC Extract process multiple times within the same reporting period. By specifying, on the Consolidated Statistics page, the academic statistics period used as the source for the previous NSC extract, you can easily distinguish between the statistics of the previous NSC extract and the next NSC extract.

Statistics Period Type

Select a statistics period type, which is a descriptor of an academic statistics period. The statistics period type identifies the type of reporting requirement for which you are using this academic statistics period. For example, you might have defined the statistics period type *IP* for IPEDS reporting, *N* for NSC reporting, and *SR* for the Student Record Census report. Because the statistics period type can affect the results of the Consolidate Academic Statistic process and the reports derived from these results, be sure that you select a statistics period type that meets your reporting needs.

Academic Load Rule

Select the academic load rule for the system to use when consolidating academic statistics. The Consolidate Academic Statistics process (SRPCCONP) uses your selection to calculate each student's academic load: full-time, half-time, part-time.

Term Load Rule Applies: When you run the Consolidate Academic Statistics process for an academic statistics period in which you have set this field to *Term Load Rule Applies* and the Load Determination field on the Level/Load Rules Table page to *Units,* the Consolidate Academic Statistics process uses the defined academic load rules from the Academic Level Table page to calculate a student's academic load, NSC academic load, and financial aid load. If you have set the Load Determination field on the Level/Load Rules Table page to *manual* or *default,* the Consolidate Academic Statistics process uses the student's career-term record or the value you enter in the Default Academic Load field, respectively, to calculate the student's academic loads, regardless of the setting for this field.

Contiguous Terms: Contiguous terms are consecutive terms in which you combine academic load information. Use this option for your academic load rule when you are combining student career-term records for consecutive terms. When you run the Consolidate Academic Statistics process for an academic statistics period in which you have set this field to *Contiguous Terms,* the Consolidate Academic Statistics process uses the defined contiguous-term academic load rules from the Statistics Period Load page to calculate a student's academic load, NSC academic load, and financial aid load. Thus, the process is able to accurately reflect each student's academic load for the combined terms.

Copyright © 1988, 2014, Oracle and/or its affiliates. All rights reserved.

For example, if 12 units equals a full-time academic load for an individual-term academic load rule, but you want to combine two consecutive terms during the Consolidate Academic statistics process, indicate on the Statistics Period Load page that 24 units equals a full-time academic load. If you do not define contiguous-term academic load rules, the Consolidate Academic Statistics process will report anyone with 12 or more units as full-time for that academic statistics period, which might not accurately reflect your data.

Consolidation Trigger

Select from the following choices the consolidation trigger to instruct the Consolidate Academic Statistics process which snapshot date to use. The snapshot date is the date that the process uses to locate the valid academic career and term combinations for this academic statistics period.

Note: If you select a consolidation trigger of *As of Date* or *As of Today,* the Consolidate Academic Statistics process takes the class start and end dates for all classes in which the student is actively enrolled and compares it to the snapshot date to determine if a student's class units should count towards her or his academic level and load calculation.

- *As of Date:* Select to have the Consolidate Academic Statistics process base the snapshot date on the date in the As of Date field.
- *As of Today:* Select to have the Consolidate Academic Statistics process base the snapshot date on the current system date when you run the process.
- Bundle 34: Documentation for Consolidation Date updated and new information added about program level reporting

  Consolidation Date: Select to have the Consolidate Academic Statistics process generate the statistics based on values retrieved from the term statistics instead of the calculating the values based on the student's enrollment on a specific date. Depending on which consolidation option you use, the consolidation date is used slightly different.

  When you select this option, a grid in the lower portion of the page appears for you to specify multiple academic career and terms combinations for each individual snapshot date for the consolidation. When this option is selected, you must run either the Take Term Statistics Snapshot process (SRPCCONA) or the Recurring Term Snapshot process (SRPCCONU) before running the Consolidated Academic Statistics process. Both SRPCCONA and SRPCCONU retrieve PS_STDNT_CAR_TERM information for each student active in the specified academic career and term combination for the corresponding row in the grid and

Copyright © 1988, 2014, Oracle and/or its affiliates. All rights reserved.

stores the values in a temporary holding table, PS_STDNT_CARTRM_PD.

If a consolidation is needed for the term, you should run the SRPCCONA process. This process consolidates enrollment by term using statistics from PS_STDNT_CAR_TERM. The snapshot date in this case is used for effective date processing when retrieving data from the setup tables. This process can also be rerun as often as needed, allowing for new students to be brought into the consolidation as well as updating the data for students who have had academic history changes since the previous run. This type of reporting is appropriate for processes like National Student Clearinghouse processing, where the units for the term are important, not the date when the snapshot of the data occurs.

If you want to take a snapshot of the student's term statistics on a specific date, you enter the appropriate date as the snapshot date in the consolidation details and run the SRPCCONU process.

Note: You must run the process on the snapshot date for it to return data.

The snapshot date is also used for effective date processing when retrieving data from the setup tables. Once run, the snapshot process cannot be rerun and trying to do so will result in the process failing. If the data must be regenerated, either the existing data must be deleted from PS_STDNT_CARTRM_PD table or a new statistics type period must be created. This type of processing would be appropriate for census date reporting and consolidating units across multiple terms to be reported in a larger unit, such as an academic year.

After running the Consolidation Date process for all the rows listed in the grid, you must then run the Consolidate Academic Statistics process (SRPCCONP).This process uses the date in the As of Date field as the effective date for all effective dated processes used in the consolidation of the data. For a student to be present in the consolidation, the student must have a *valid program status as defined for this statistics type* for the specified academic career / term combinations defined and have records in the temporary holding table (PS_STDNT_CARTRM_PD).

Copyright © 1988, 2014, Oracle and/or its affiliates. All rights reserved.

Note:

Bundle 34

The Consolidated Academic Statistics process derives NSC program level data only if the Consolidation Trigger of *Consolidation Date* is selected (and the NSC Report check box is selected on the Academic Statistics Type page).
See:
Setting Up For NSC Program Level Reporting
Understanding Consolidate Academic Statistics Process Calculations

As of Date

This field becomes available when you select *As of Date* or *Consolidation Date* in the Consolidation Trigger field. If you select *As of Date* as your consolidation trigger, the Consolidate Academic Statistics process uses this date as the snapshot date. If you select *Consolidation Date* as your consolidation trigger, the Consolidate Academic Statistics process uses the date in this field as the effective date for all records that it generates. The date in this field must be after the latest snapshot date in the grid in the lower portion of this page. This ensures that the academic statistics for all of the academic career and term combinations have been gathered and stored in the temporary holding table prior to consolidation.

Aid Year

Bundle 34: New

This field is available when the NSC Report check box is selected for the statistics period type on the Academic Statistics Type page. The value that you enter here is used to retrieve Credential Level Cross Reference and Title IV Weeks values from Financial Aid setup data.

See Setting Up For NSC Program Level Reporting

Defining Valid Academic Career, Term, and Snapshot Date Combinations

When you define an academic statistics period to have *Consolidation Date* for its *consolidation trigger,* the system displays a grid in the lower portion of that page for you to enter the specific academic career, term, and snapshot date combinations to include in this academic statistics period. When you run the Take Recurring Term Snapshot process, it accepts as valid only the combinations on this grid for the given academic statistics period. The process gathers the most current statistics on students active in these academic career and term combinations as of the run date, then stores this data in a temporary holding table (PS_STDNT_CARTRM_PD) for future consolidation through the Consolidate Academic Statistics process.

To gather statistics that reflect different times of the year, you must run the Take Recurring Term Snapshot process on a regular basis because the statistics themselves are based on the run date, not the snapshot date.

 Copyright © 1988, 2014, Oracle and/or its affiliates. All rights reserved.

For example, perhaps you have a fall semester and a spring semester for each of your academic careers and your want to combine the historic academic statistics for all of these academic career and term combinations so that you have year-long academic statistics for your entire academic institution.

In the grid, indicate that you want to take one snapshot in the fall term and one snapshot in the spring term for each academic career. Set the academic statistics period to a consolidation mode of *insert* so that you do not overwrite the data in the temporary holding table on subsequent runs of the Take Recurring Term Snapshot process.

On or shortly following each snapshot date for all of the academic career and term combinations listed for the academic statistics period, run the Take Recurring Term Snapshot process (through the Consolidated Statistics page) to capture the data current as of the run date for these academic career and term combinations. The process writes the data to the temporary holding table.

After running the Recurring Term Snapshot process for all of the academic career and term combinations listed for the academic statistics period, run the Consolidate Academic Statistics process to consolidate the academic statistics for this academic statistics period. The process consolidates each student's academic statistics for all applicable rows in the temporary holding table.

Academic Career Select the academic career that the Take Recurring Term Snapshot process will consider as part of a valid combination for this academic statistics period.

Term Select the term within the academic career that the Take Recurring Term Snapshot process will consider as part of a valid combination for this academic statistics period.

Snapshot Date Select the date that the Take Recurring Term Snapshot process should be run for this academic career and term combination. For the process to consider this academic career and term combination valid, the term must be in progress as of the specified date.

Note: If you select a consolidation trigger of *As of Date* or *As of Today,* the Consolidate Academic Statistics process takes the class start and end dates for all classes in which the student is actively enrolled and compares it to the snapshot date to determine if a student's class units should count towards her or his academic level and load calculation.

Related Links

Understanding Consolidate Academic Statistics Process Calculations

"Defining Academic Level and Load Rules (PeopleSoft Campus Solutions 9.0 Application Fundamentals PeopleBook)"

Setting Up For NSC Program Level Reporting

Bundle 34: New

Copyright © 1988, 2014, Oracle and/or its affiliates. All rights reserved.

As of bundle 34 (July 2014) institutions must report *program level* data for each student, in addition to overall enrollment status and status effective date data. That is, if a student is pursuing multiple programs, an institution must report enrollment data by program in addition to overall (per student) enrollment status related data. Within the single row of data per student required by NSC, columns are available to report up to six sets of program level data (enrollment status, program start date and so on) per student.

In Campus Solutions, the requirement to report program level data is managed as follows: The NSC extract reports program level data per active *academic career* for the specified Consolidated Statistics reporting period. That is, NSC program data is equivalent to Campus Solutions career level data, because academic load is always calculated at the academic career level. This means that a student who is active and enrolled under multiple academic careers for a reporting period has an overall consolidated enrollment status/status date plus a set of enrollment status/dates for each active career. A student active in a single career - regardless of the number of active academic programs - has a consolidated enrollment status and a single (matching) program level status. The Consolidated Statistics logic that existed before bundle 34 continues to determine career primacy and program/plan primacy within each career.

Steps for Implementing NSC Program Level Reporting

1. Academic Plan Table: You must define NSC Plan data. NSC program level data is sourced from the Academic Plan Table (Set Up SACR, Foundation Tables, Academic Structure, Academic Plan Table).

   See "Setting Up Taxonomy *(PeopleSoft Campus Solutions 9.0 Application Fundamentals PeopleBook)*"

2. Financial Aid Set Up: Work with your Financial Aid office to ensure that the SULA Credential Level Cross Reference page is populated and that Title IV Weeks of Instruction data is available for students (by Aid Year).

   Credential Level values are entered on the SULA Credential Level Cross Reference page which maps Academic Plan Table NSC Classification values to SULA Credential Level values (Set Up SACR, Product Related, Financial Aid, Loans, SULA, Credential Cross Reference).

   See:"Setting Up 150 Percent Direct Subsidized Loan Limit (SULA) *(PeopleSoft Financial Aid 9.0 PeopleBook)*"

   The Title IV Weeks of Instruction field is required when reporting program data where the published program length is measured in weeks or months. Financial Aid Academic Base Weeks is used to populate this field and the value is determined according to an established hierarchy.

   See:

   Understanding Consolidate Academic Statistics Process Calculations

   "Establishing Defaults *(PeopleSoft Financial Aid 9.0 PeopleBook)*"

3. Statistics Type: Update (or create) your NSC Statistics Type: Enter a Year CIP Code Published value (as at July 2014, the current year published is 2010).

   See Setting Up Statistic Period Types

4. Statistics Period(s): Create Academic Statistics Period(s) for NSC Reporting. The statistics period must use a Consolidation Trigger of *Consolidation Date* and you must assign an Aid Year value so that the process can access Financial Aid set up data.

 Copyright © 1988, 2014, Oracle and/or its affiliates. All rights reserved.

See Setting Up Academic Statistics Periods

Copyright © 1988, 2014, Oracle and/or its affiliates. All rights reserved.